Petri Dishes

I. APPLICATIONS

1. Microbiology
2. Bacterial culture

II. FEATURES

1. Materials: Medical grade polystyrene
2. Sterile
3. Disposable
4. Highly transparent for microscopic analysis
5. DNase & RNase free, human DNA free

III. PETRI DISH DESIGN

1. Available in 150×15mm, 100×15 mm, 90×17mm, 90×15mm or 60×15mm
2. With ventilation holes
3. Stackable

IV. PACKAGING

1. Bulk, 10 pieces/bag, 50 bags/case
2. Bulk, 10 pieces/bag, 20 bags/case

V. DESCRIPTION

Item	Description	Packaging	Sterile
66-1515	150×15 mm petri dish	Bulk, 10 pieces/bag, 20 bags/case	Yes
66-1600	100×15 mm petri dish	Bulk, 10 pieces/bag, 50 bags/case	Yes
66-1501	90×15 mm petri dish	Bulk, 10 pieces/bag, 50 bags/case	Yes
66-1701	90×17 mm petri dish	Bulk, 10 pieces/bag, 50 bags/case	Yes
66-1560	60×15 mm petri dish	Bulk, 10 pieces/bag, 50 bags/case	Yes

VI. STERILITY

1. Yes.
2. For each lot, sterilization records are recorded and signed off by qualified personnel for product release.

VII. CERTIFICATION

Biologix products are manufactured completely according to the TUV ISO 9001:2015 standard.

VIII. RESTRICTIONS

Refer to the Chemical Resistance Chart in our catalog, and available within our online catalog.

IX. PRODUCT PHOTOS



X. PRODUCT PARAMETER

Dimensions=mm

Cat#	A	B	C	D	E	F	G	H
66-1501	O.D. 90.3	O.D. 86.6	7.96	6.99	12.88	12.02	14.54	0.97
66-1560	O.D. 57.3	O.D. 53.8	10.0	9.06	14.3	13.37	16.0	0.94
66-1515	O.D. 147.5	O.D. 143.4	8.6	7.3	14.7	13.49	16.5	1.3
66-1701	O.D. 93	O.D. 90	8.5	7.76	15.5	14.5	16.71	0.74
66-1600	O.D. 99.1	O.D. 94.6	9.6	8.6	15.51	14.51	17.1	1.0

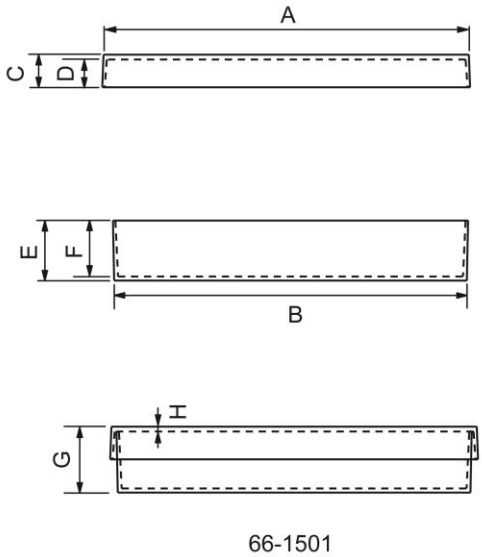

66-1501

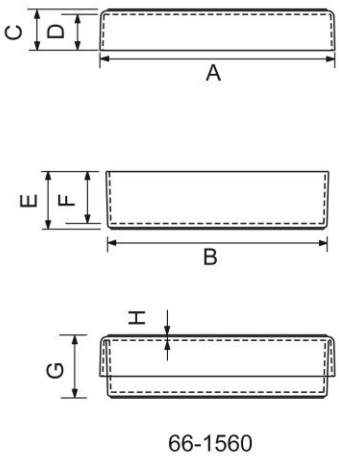

66-1560

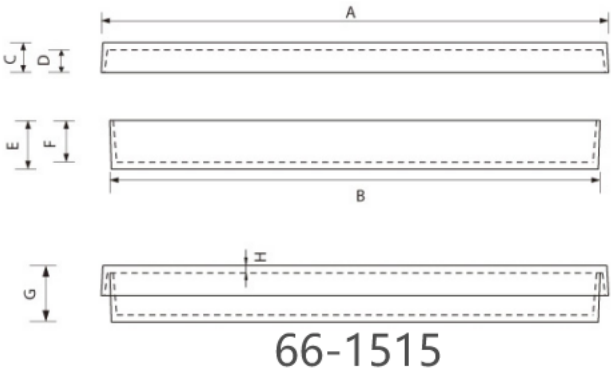

66-1515

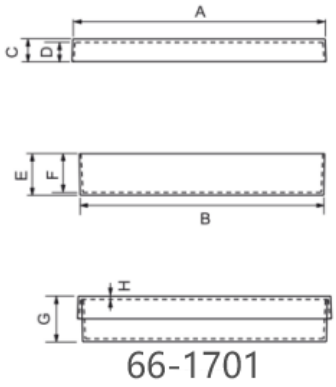

66-1701

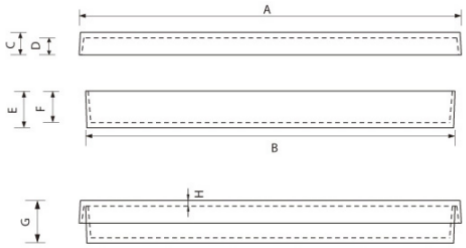

66-1600