Tube Racks

I. APPLICATIONS

1. Storage and organization of 0.2 mL, 0.5 mL, 1.0 mL, 1.5 mL or 2.0 mL microtubes, and 15ml or 50ml centrifuge tubes

II. FEATURES

1. Material: high strength plastic, polypropylene or cardboard
2. Chemically resistant to alcohols and mild organic solvents
3. Microtube Racks: 80 wells, 60 wells, Centrifuge tube Racks: 16 wells, 25 wells, 36 wells or 50 wells
4. Microtube Racks: blue, green, red, yellow, purple or electric pink
   Centrifuge Tube Racks: Blue or white
5. Microtube Racks: Holds 0.2 mL, 0.5 mL, 1.0 mL, 1.5 mL or 2.0 mL microtubes
   Centrifuge Tube Racks: Holds 15 mL or 50 mL centrifuge tubes

IV. PACKAGING

1. Microtube Racks: 5 pieces/bag, 4 bags/case; 5 pieces/bag, 20 bags/case
2, Centrifuge Tube Racks: 1 piece/bag, 20 bags/case

V. DESCRIPTION

Item	Description	Packaging	Sterile
90-8009	80-well microtube rack, assorted colors	5 pieces/bag, 4 bags/case	No
90-1536	36-well microtube rack, white	5 pieces/bag, 20 bags/case	No
90-5016	16-well microtube rack, white	5 pieces/bag, 20 bags/case	No
90-1550	50-well Centrifuge tube rack, blue	1 piece/bag, 20 bags/case	No
90-5025	25-well Centrifuge tube rack, blue	1 piece/bag, 20 bags/case	No
90-8060	80-well+60-well microtube rack, electric pink	1 piece/bag, 20 bags/case	No

VI. STERILITY

1. N/A

VII. CERTIFICATION

Biologix products are manufactured completely according to the TUV ISO 9001:2015 standard.

VIII. RESTRICTIONS

Refer to the Chemical Resistance Chart in our catalog, and available within our online catalog.

IX. PRODUCT PHOTOS



90-8009



90-1550



90-5025



90-1536&90-5016



90-8060

X. PRODUCT PARAMETER

Dimensions=mm

Cat #	Description	A	B	C	D	E	F	G
90-8009	Racks	209	27.2	26	O.D. 11.4	66	13	13

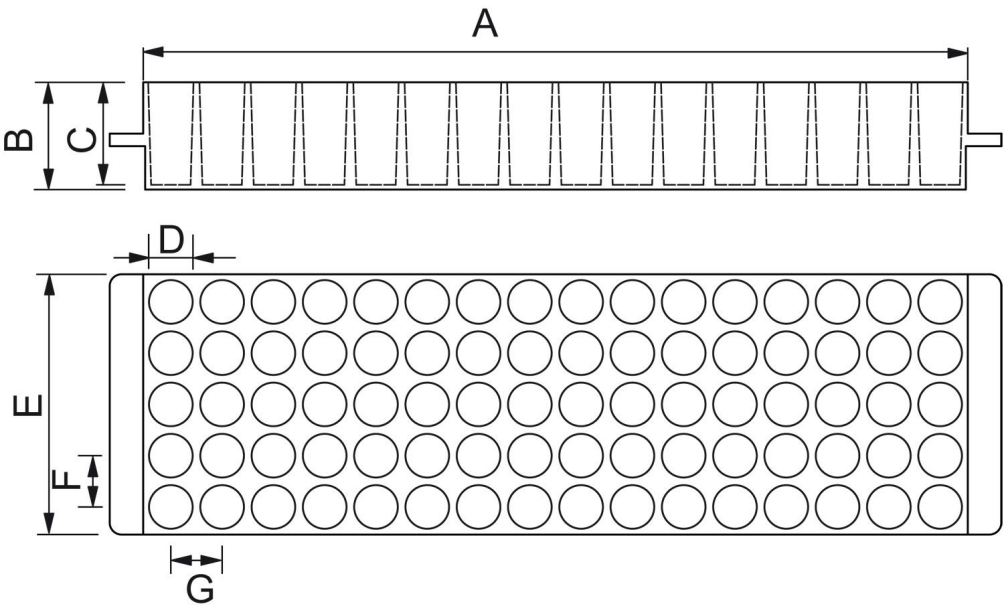

90-8009

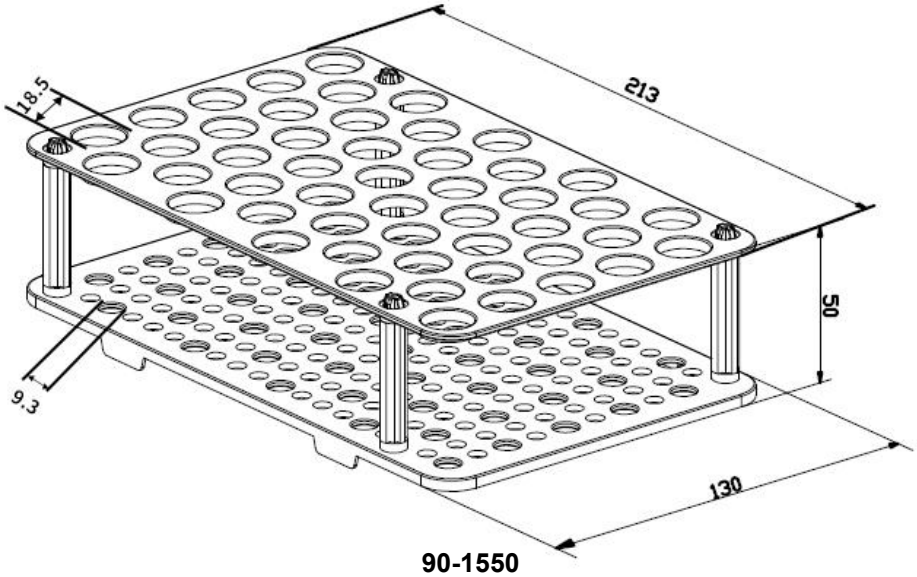

90-1550

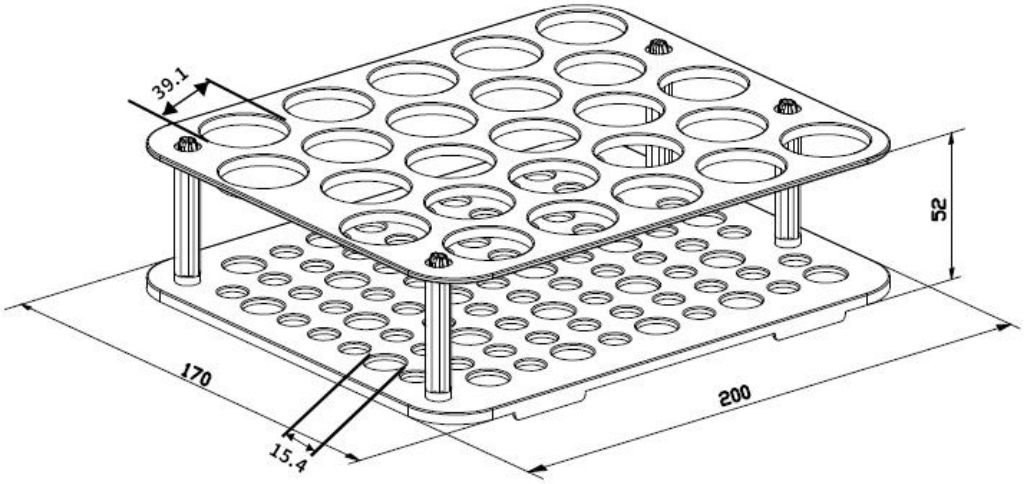

90-5025

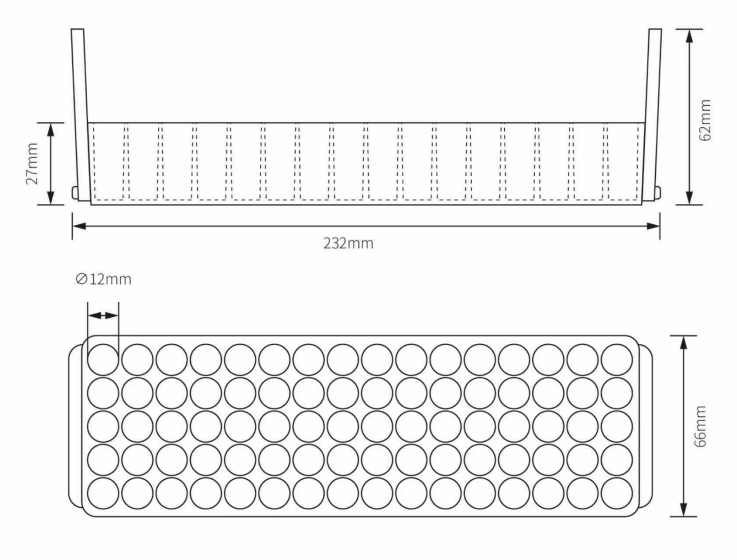

90-8060

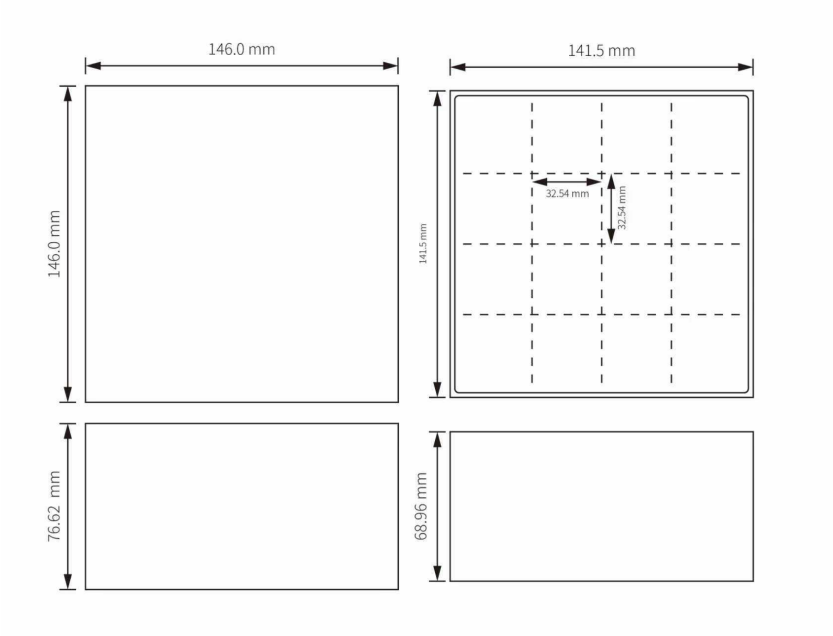

90-5016

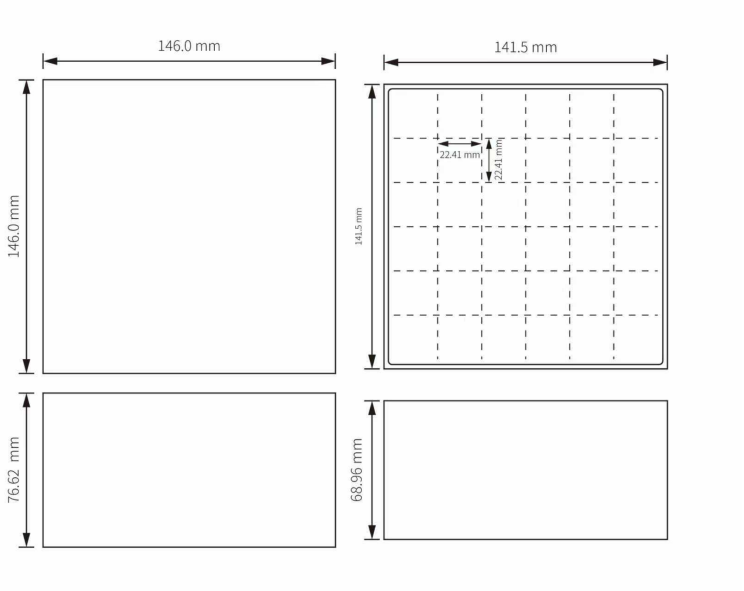

90-1536